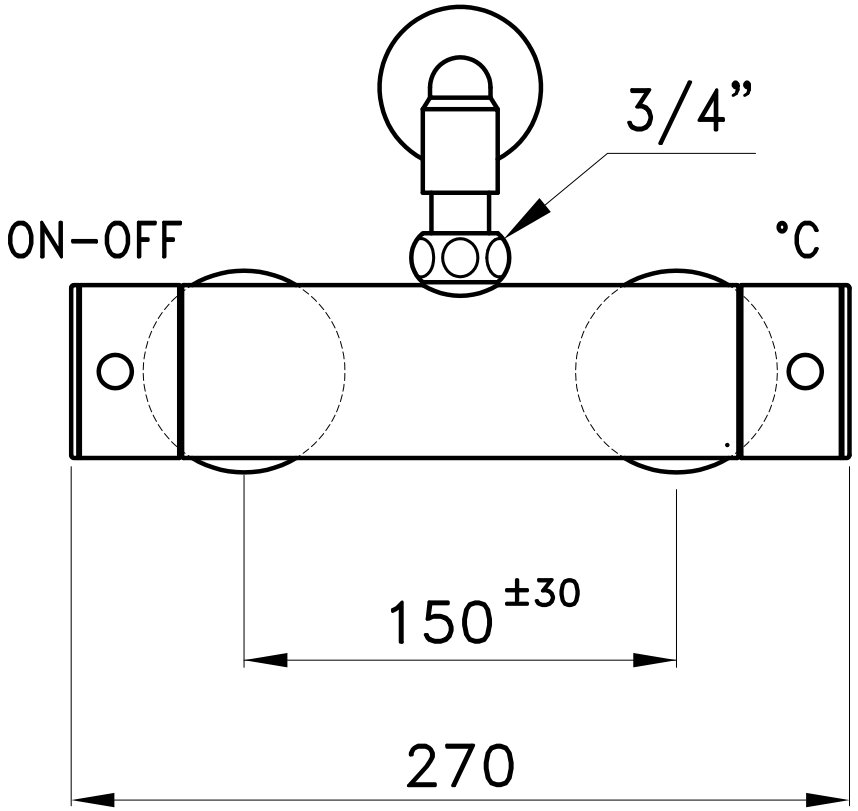
3/4”
ON–OFF
°C
150 ±30
270

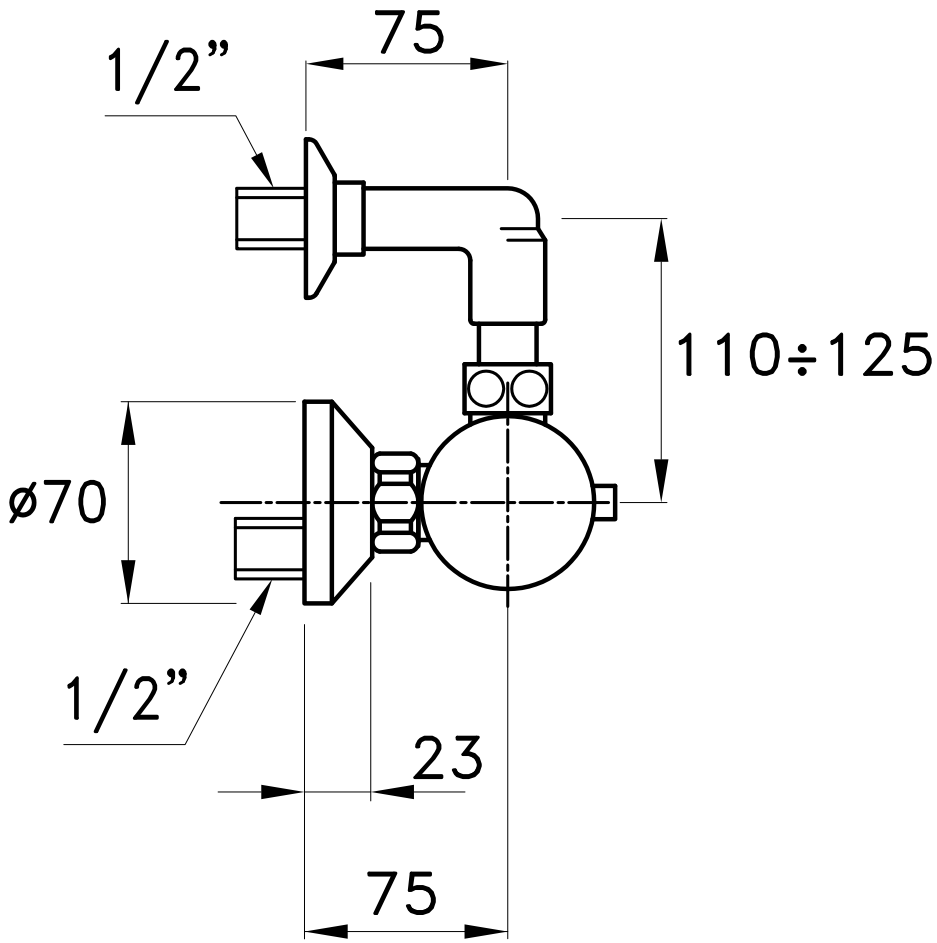
75
1/2”
110÷125
ø70
1/2”
23
75