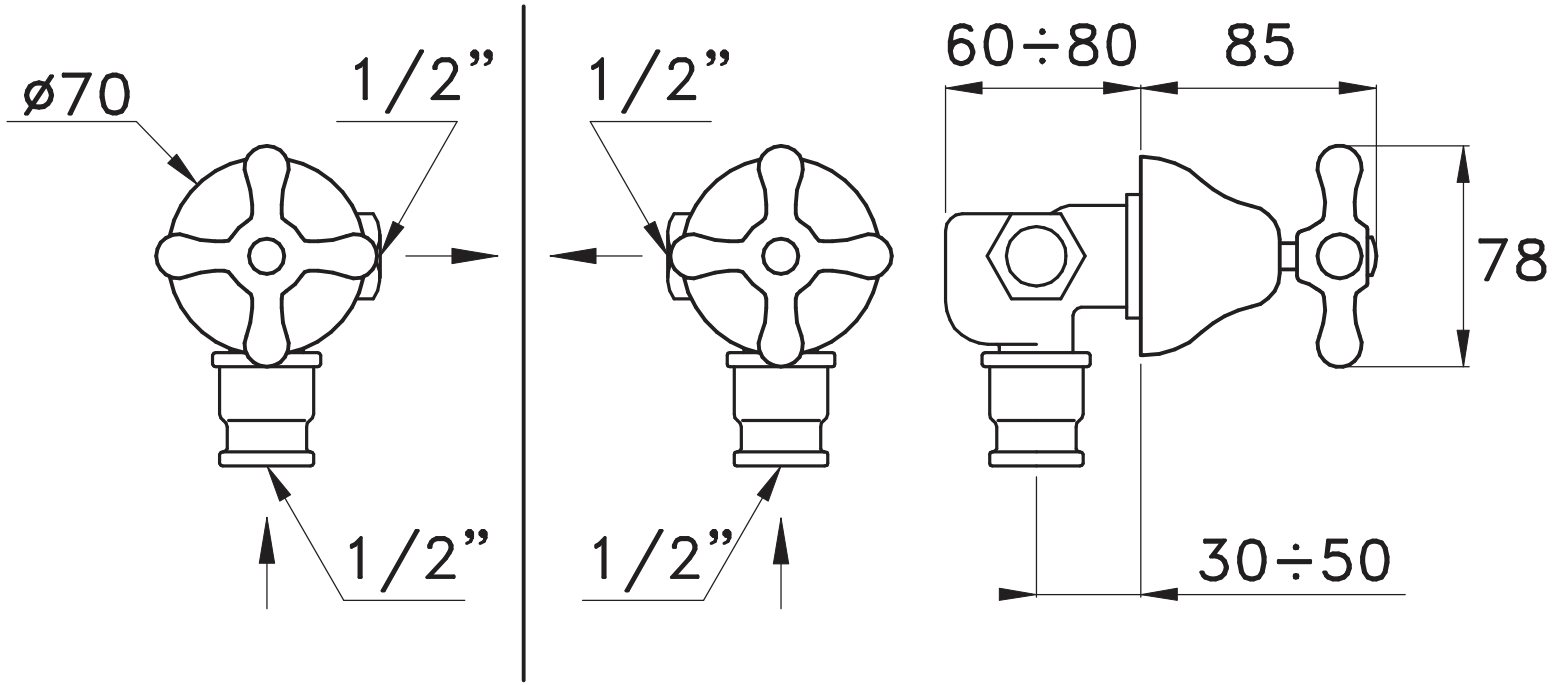

0/152 ROMA