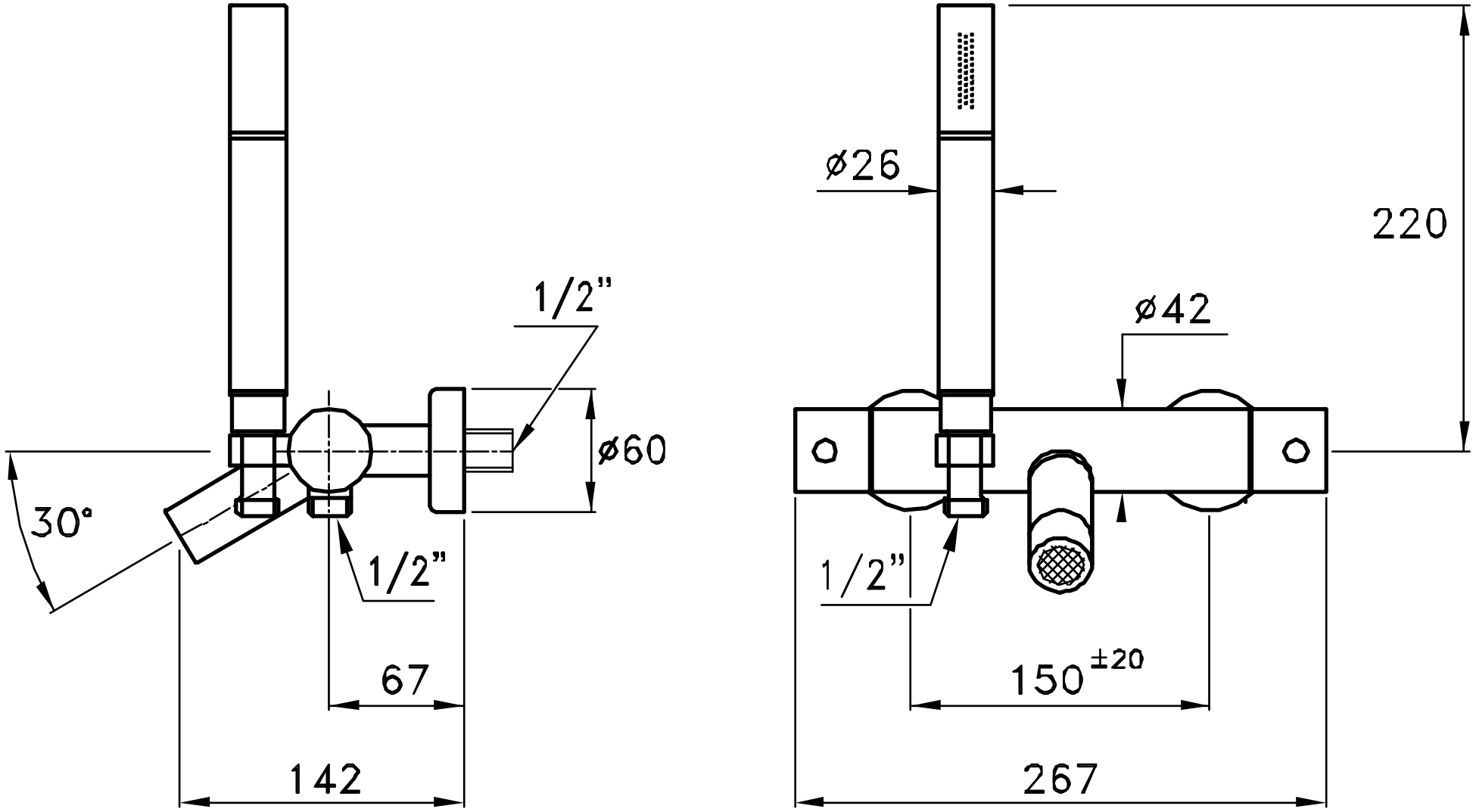
1/2"
ø60
30°
1/2"
67
142
ø26
220
ø42
1/2"
150 ±20
267