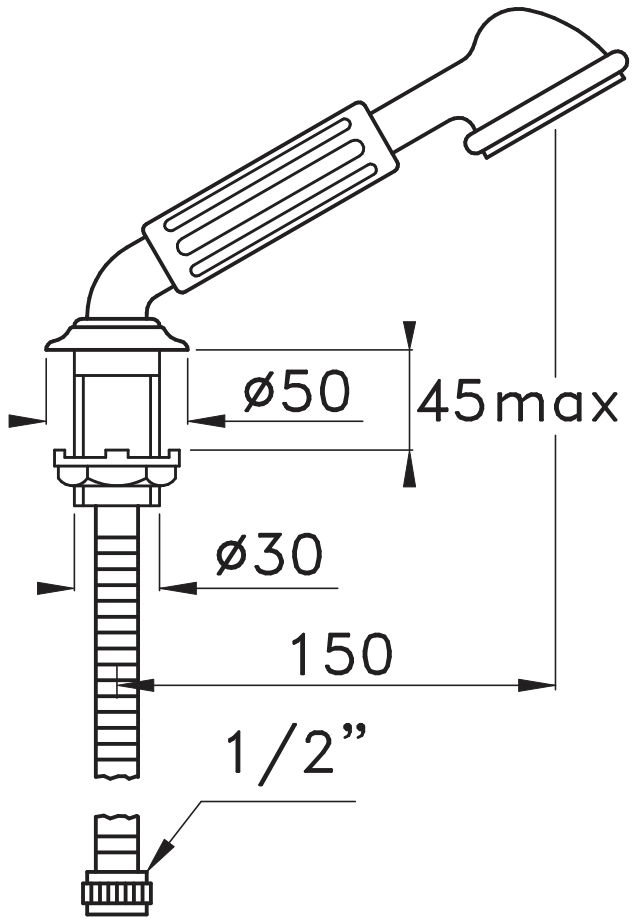

308 ROMA–ITALICA