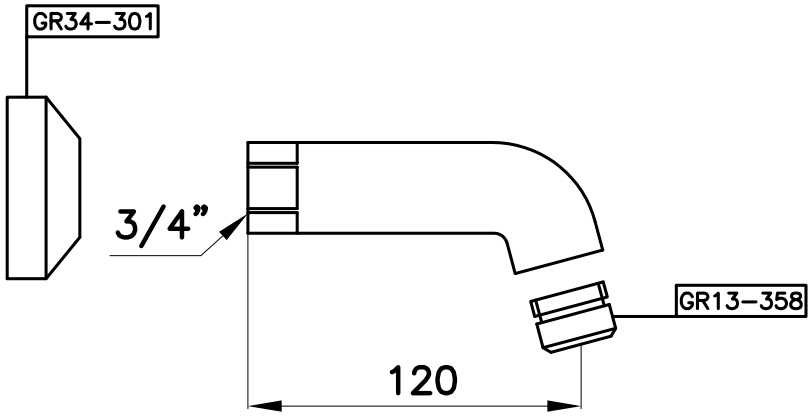BOX 0/251